Håndvaskarmatur MEDICARE

Basin mixer MEDICARE is made from a lead-free material and it have a clean visual design with round, smooth lines, and joints have been kept to a minimum. The mixer has clear color markings on the lever and extra-long spouts to easily access the water jet. The aerator is angled at 32 degrees, which optimizes the aim of the water jet in the basin. The mixer also has FM Mattsson's well-known energy-saving solutions and functions such as cold start and soft closing. The mixer comes with a self-closing hand shower, wall bracket and a hose.

About the collection
FM Mattsson MEDICARE collection has been designed in close collaboration with healthcare professionals. A new collection that emphasis on hygiene, accessibility and sustainability and has been developed to meet the specific needs of the healthcare sector and make daily life easier for people with reduced mobility and orientation capacity.

Artikel-nummer: 32570010 **Flow 3 bar:** 5,1 l/m
Beskrivelse: Krom

Unikke egenskaber

Accepterad monteringsanvisning 2021:1

B Energiklasse

Tilbageløbssikring EB

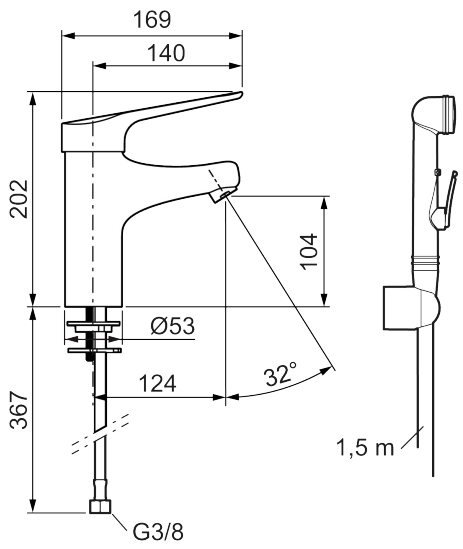

- Med selvlukkende håndbruser, ophæng, 1500 mm slange.
- Handicapvenligt.
- Koldstart.
- Soft Closing og keramisk kartusche.
- Indbygget temperatur- og flowbegrænser.
- Flowbegrænser (uden luftblanding) maksimalt vandforbrug 6 l/min ved 2–6 bar tryk, med vinkelbøjning på 32°.
- Fleksible tilslutningsrør i metalindpakket Soft PEX® med beskyttende plastikafdækning for øget hygiejne og lettere rengøring.
- Med forlænget tud for at mindske risikoen for, at strålebilledet rammer håndvaskens bundventil, tudfremspring 124 mm.
- Hygiejnisk design, greb og armaturenhed uden delelinjer.
- Lead Free (blyfri).
- Støjklasse 1 (håndbruse 2) (ISO 3822)
- Hulstørrelse Ø28–37 mm.
- 5 års trykgaranti.